STEADY STATE ANALYSIS AND PERFORMANCE CHARACTERISTICS OF THE LLC-TYPE PARALLEL RESONANT CONVERTER

I. Batarseh, R. Liu‡, A. Ortiz-Conde*†, A. Yacoub*, and K. Siri+*

*Electrical and Computer Engineering Department, University of Central Florida, Orlando, FL 32816, USA.
Tel. (407) 823-0185 Fax. (407) 823-5835

‡Philips Laboratories, 345 Scarborough Road, Briacliff Manor, NY 10510-2099, USA.

+Department of Engineering and Test (FB67), Rockwell International Corp., Rocketdyne Division,
6633 Canoga Ave., Canoga Park, CA 91309, USA.

Abstract: In this paper, the steady state analysis of a new half-bridge dc-to-dc parallel resonant converter with LLC-type commutation circuit will be presented. Based on the state variable transformation approach, a two-dimensional state-plane diagram will be constructed to obtain the steady state response. A set of characteristic curves for output conversion and component stresses is derived from the analysis which can be used for the converter design. It will be shown that based on these curves, the proposed resonant topology possesses more desirable features than the conventional parallel resonant converter. Also simulation results will be presented to verify the theoretical approach.

I. INTRODUCTION

In order to achieve smaller size and lighter weight power supplies with faster transient response, interest in high frequency dc-to-dc resonant converters has been steadily in the increase since the early 1980's. Because of the reduced switching losses due to the sinusoidal behavior of resonant converters, it is possible to operate such converters at high frequency to reduce the size of their reactive components. The majority of the existing topologies, whether full-bridge, half-bridge or single-end quasi-resonant are of the second order resonant tank circuit, i.e. the storage tank consists of only two energy storage elements. However, in recent years, resonant topologies with three and four energy storage elements have been presented in the literature [1-10].

Compared with the conventional second order resonant converters, higher order converters are shown to posses more desirable control characteristics. The previous analysis of the capacitive-coupled LCC-type [7,8] and LLC-type [9,10] resonant converters show that these converters exhibit better control characteristics than the conventional converters. In addition, by using higher order resonant tanks, the designer has the choice of utilizing the parasitic capacitance and inductance which always exist in the converter circuit, especially when operating at very high frequency. As a result, depending on the topology use, the parasitic reactance can turn into an asset rather than a liability. Moreover, the diversity in resonant topologies gives the designer the freedom to choose the topology that most suits his or her application. However, the drawback is that since these converters are high order nonlinear system, their steady analyses become more difficult.

In this paper, we present a new converter topology by adding an inductor in parallel with the resonant capacitor of the conventional Capacitive-Coupled PRC [11]. Hence, we will refer to this topology as LLC-type Parallel Resonant Converter (PRC-LLC). It can be shown that the new topology possesses the advantages of low converter gain and less component stress over the conventional PRC. Using a proper linear transformation on the state variables, the new converter circuit can be analyzed by means of a two-dimensional state-plane diagram. This method can be also adapted in the analysis of fourth order or even higher order converters. From the analysis, a set of characteristic curves is presented which provide more information for the converter design. Computer simulation results are also given for the converter under line and load variations.

II. BASIC CIRCUIT OPERATION

The simplified equivalent circuit of the half-bridge PRC-LLC is shown in Fig. 1. The basic circuit operation of this topology is similar to the capacitive-coupled LCC-type parallel resonant converter [7,8]. A set of typical steady state voltage and current waveforms of PRC-LLC operated in the continuous conduction mode (CCM) are shown in Fig. 2, where M1, M2, M3 and M4 are the four circuit modes which correspond to the four circuit topologies shown in Fig. 3.

We must note that at $t=t_1$, the voltage v_{L2} reverses polarity, hence, the current into the output rectifier, i_E, also changes

†On sabbatical leave from Universidad Simón Bolívar, Apdo. 89000, Caracas 1080A, Venezuela.

0-7803-1859-5/94/$4.00 © 1994 IEEE

direction as shown in Fig. 2. Also, at $t=t_2$, the input current, i_{in}, becomes negative causing D1 to turn on and T1 naturally turn off. Similarly, at $t=t'_2$, T2 turns off and D2 starts conducting. This mode of operation is known as natural mode of operation since both T1 and T2 are turned-off at zero current crossing.

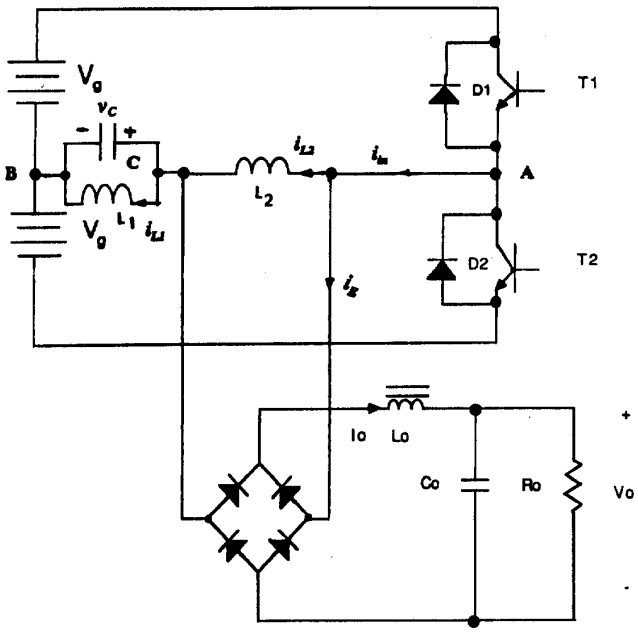

Fig. 1 Half-bridge LLC-Type Parallel Resonant Converter.

Table I gives the necessary and sufficient conditions for the occurrence of these modes. The derivation of these models will be discussed further in the next section.

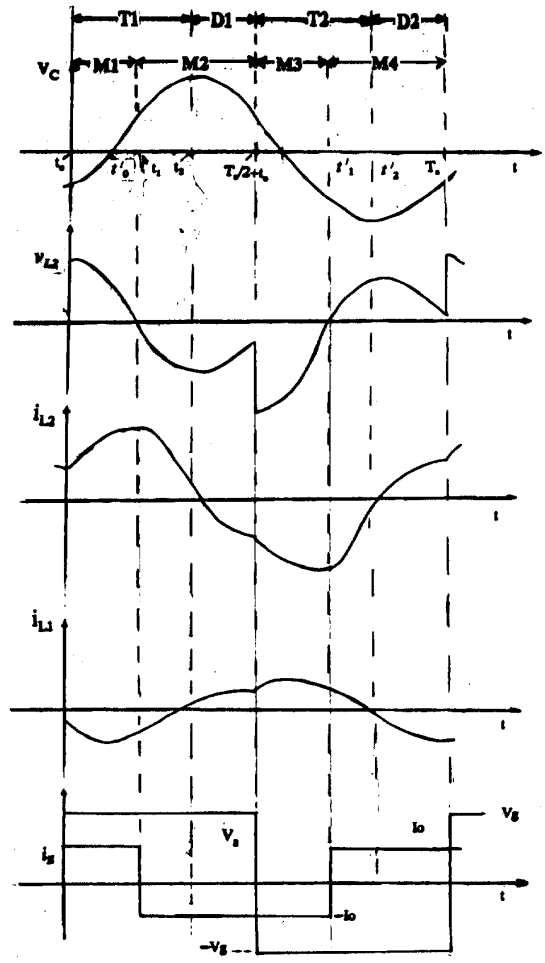

Fig. 2 Typical Current and Voltages Wavefroms for the PRC-LLC.

Table I: Converter Modes Of Operation and their time Intervals

Circuit Mode	Devices on	Sign of the Link Voltage, v_{AB}	$v_s(t)$	$i_g(t)$	Time Interval
M1	T_1	$v_{L2}(t)>0$	$+V_g$	$+I_o$	$t_0< t <t_1$
M2	T_1	$v_{L2}(t)<0$	$+V_g$	$-I_o$	$t_0< t <t_2$
	D_1	$v_{L2}(t)<0$	$+V_g$	$-I_o$	$t_2<t<t_0+T_s/2$
M3	T_2	$v_{L2}(t)<0$	$-V_g$	$-I_o$	$t_0+T_s/2<t<t'_1$
M4	T_2	$v_{L2}(t)>0$	$-V_g$	$+I_o$	$t'_1< t <t'_2$
	D_2	$v_{L2}(t)>0$	$-V_g$	$+I_o$	$t'_1< t <t_0$

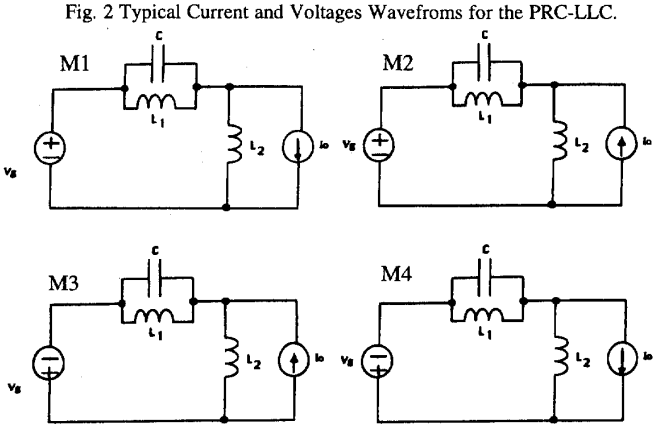

Fig. 3 Equivalent Linear Circuit Modes in the CCM.

In order to simplify the analysis, we assume that the diode/transistor pairs D_1/T_1 and D_2/T_2 are ideal and can be represented by two bidirectional switches operated at 50% duty cycle. As a result, we may represent the effect of the switching devices T_1/D_1 and T_2/D_2 by an equivalent square-wave voltage source $v_s(t)$ with amplitudes $+V_g$ and $-V_g$, respectively. Moreover, the load current I_o will be considered constant since the output filtering inductance L_o is assumed large. Consequently, the input current to the output bridge, $i_E(t)$, will take on two values: $+I_o$ and $-I_o$, depending on whether the link voltage $v_{L2}(t)$ is positive or negative, respectively. Hence, $i_E(t)$ can be represented by the following equation:

$$i_E(t) = \frac{v_{L2}(t)}{|v_{L2}(t)|} I_o \tag{1}$$

The simplified equivalent circuit is shown in Fig. 4.

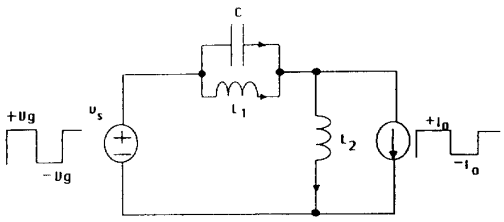

Fig. 4 Equivalent circuit model of Fig. 1

III. STEADY STATE ANALYSIS

The steady state response for the converter can be obtained from the idealized circuit of the half-bridge PRC-LLC is shown in Fig. 4. The governing differential equations for this circuit are given by,

$$\frac{di_{L2}}{dt} = \frac{1}{L_2}(v_s - v_C) \tag{2}$$

$$\frac{dv_C}{dt} = \frac{1}{C}(i_{L2} - i_{L1} + i_E) \tag{3}$$

$$\frac{di_{L1}}{dt} = \frac{1}{L_1} v_C \tag{4}$$

The above equations represent a third order nonlinear system that must be solved to obtain the steady state response. It has been shown [7] that the steady state analysis can be easily derived from the state-plane diagram using the state variable transformation technique.

To facilitate the steady state analysis, we first perform the following transformation on the state variables:

$$\begin{bmatrix} i_L \\ i_{L2} \\ v_C \end{bmatrix} = \begin{bmatrix} -1 & 1 & 0 \\ 0 & 1 & 0 \\ 0 & 0 & 1 \end{bmatrix} \begin{bmatrix} i_{L1} \\ i_{L2} \\ v_C \end{bmatrix} \tag{5}$$

The purpose of this transformation is to have i_L and v_C decoupled from i_{L2} so that their steady state response can be represented by a closed contour in the v_C-i_L plane. It is clear that the new state variable $i_L(t)$ is a linear combination of $i_{L1}(t)$ and $i_{L2}(t)$.

Substituting eqs. (2)-(4) into (5), the following two first order differential equations are obtained:

$$\frac{di_L}{dt} = \frac{1}{L_2}\left(v_s - (1 + \frac{L_2}{L_1})v_C\right) \tag{6}$$

$$\frac{dv_C}{dt} = \frac{1}{C}(i_E + i_L) \tag{7}$$

From eqs. (6) and (7), we obtain the following first order state-space equation.

$$\frac{di_L(t)}{dv_C(t)} = \frac{C\left(v_s(t) - (1 + \frac{L_2}{L_1})v_C(t)\right)}{L_2\,(\,i_E(t) + i_L(t)\,)} \tag{8}$$

Normalizing all voltages and currents by V_g and V_g/Z_o, respectively, the normalized state-plane equation in terms of i_{nL} and v_{nC} is obtained from eq. (8):

$$\frac{di_{nL}(t)}{dv_{nC}(t)} = \frac{v_{ns}(t) - v_{nC}(t)}{i_{nE}(t) + i_{nL}(t)} \tag{9}$$

where

$$v_{nC}(t) = \frac{v_C(t)}{V_g}, \quad i_{nL}(t) = \frac{Z_o i_L(t)}{V_g}$$

$$v_{ns} = \frac{v_s(t)}{(1 + \frac{L_2}{L_1})V_g}, \quad i_{nE} = \frac{Z_o i_E}{V_g} \tag{10}$$

$$Z_o = \sqrt{\frac{L_T}{C}}, \qquad L_T = \frac{L_1 L_2}{L_1 + L_2}$$

When the converter is operated in continuous condition mode (CMM), the steady state solution of eq. (9) consists of four circular arcs in the v_{nC}-i_{nL} state-plane. Over a half switching

period when $v_s(t)$ equals to V_g, the steady state solution of eq. (9) is given by,

$$(i_{nL}(t) + I_{no})^2 + (v_{nC}(t) - a)^2 = V^2_{nm1} \tag{11}$$

$$(i_{nL}(t) - I_{no})^2 + (v_{nC}(t) - a)^2 = V^2_{nm2} \tag{12}$$

where,

$$V_{nm1} = \sqrt{(i_{nL}(t_o) + I_{no})^2 + (v_{nC}(t_o) - a)^2} \tag{13}$$

$$V_{nm2} = \sqrt{(i_{nL}(t_1) - I_{no})^2 + (v_{nC}(t_1) - a)^2} \tag{14}$$

$$a = \frac{L_1}{L_1 + L_2}$$

The normalized output current, I_{no}, is equal to I_oZ_o/V_g. The initial values $v_{nC}(t_o)$ and $i_{nL}(t_o)$ are the normalized capacitor voltage and inductor current at the switching time $t = t_o$; $i_{nL}(t_1)$ and $v_{nC}(t_1)$ are the normalized values at $t=t_1$ when the load current changes polarity at $v_{nC}(t_1)=1$ as shown in Fig. 2. The above equations describe a family of circles with centers located at the singular points $(a,-I_{no})$ and $(a,+I_{no})$, respectively. Similarly, over the second half of the switching period when $v_s(t)$ equals to $-V_g$, the steady state solution can be represented by equations of circles with centers located at $(-a, I_{no})$ and $(-a, -I_{no})$. A typical state-plane diagram for the steady state solution is shown in Fig. 5.

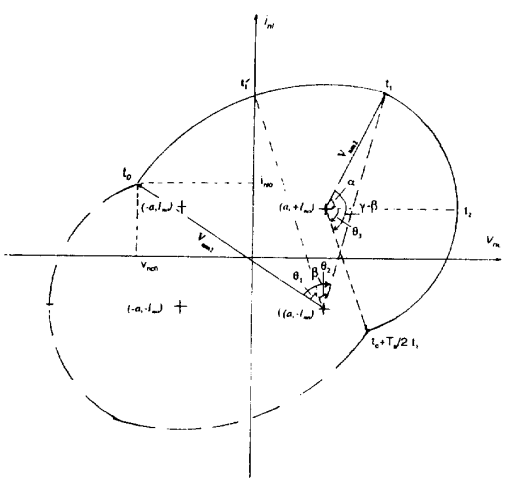

Fig. 5 Typical State-Plane Diagram for the Converter.

The average output voltage, which is also called the converter gain, can be calculated from the following relation,

$$V_o = \frac{1}{T_s/2}\int_{t_o}^{t_o+T_s/2} |v_{L2}| dt = \frac{1}{T_s/2}\left[\int_{t_o}^{t_1} v_{L2} dt - \int_{t_1}^{T_s/2+t_o} v_{L2} dt\right] \tag{15}$$

Evaluating the above integral over half switching frequency, it can be shown that the following normalized output voltage can be obtained:

$$\frac{V_o}{V_g} = M = \frac{1}{\gamma(1+L_1/L_2)}\left[-(\gamma - 2\beta) + 2i_{nL}(t_1)\right] \tag{16}$$

where,

$$\gamma = \pi\frac{f_o}{f_s} = \frac{\pi}{f_{ns}} \qquad \beta = \omega_o(t_1 - t_o) \tag{17}$$

Where f_{ns} is the normalized switching frequency, f_o and f_s are the resonant and switching frequencies, respectively. The angle γ is the conduction angle of switching devices over a half switching period and β is part of the conduction angle of the switching transistor during which $i_E(t)=+I_o$. The average input current can be calculated from the following relation:

$$I_g = \frac{1}{T_s/2}\int_{t_o}^{t_o+T_s/2} (i_{L2} + i_E(t))dt \tag{18}$$

It can be shown that the evaluation of this integral gives the following relation:

$$I_{ng} = \frac{1}{\gamma(1+\frac{L_1}{L_2})}\left[-(\gamma - 2\beta)I_{no} - 2\frac{L_1}{L_2}v_{nC}(t_o)\right] \tag{19}$$

Since the circuit is assumed lossless, conservation of power, $I_oV_o = I_gV_g$, leads to the following relation,

$$i_{nL}(t_1) = \frac{-v_{nC}(t_o)}{(1+\frac{L_2}{L_1})I_{no}} \tag{20}$$

It can be shown that eq. (20) can be derived directly from

the v_{nc}-i_{nL} plane for a general steady state trajectory given in Fig. 5. This means that eq. (20) is the necessary condition for all the steady state trajectories. It can be shown that based on eq. (9), the steady state trajectory can be uniquely determined if the initial switching point [$v_{nC}(t_o)$, $i_{nL}(t_o)$] is also known. This reveals that the design of the PRC-LLC can be done by means of the state plane diagram if we can relate the design parameters, such as M, I_{no}, and γ to the initial switching point.

IV. CHARACTERISTIC PARAMETERS

In this section, we will determine the relations between design parameters M, γ, I_{no}, and Q_p and the initial switching point $v_{nC}(t_o)$ and $i_{nL}(t_o)$, where Q_p is the quality factor that is defined by,

$$Q_p = \frac{R_o}{Z_o} \tag{21}$$

where R_o is the output resistor given by $R_o=V_o/I_o$.

From eqs. (11) and (13), we can derive a relation for the initial inductor current switching value, $i_{nL}(t_o)$, as shown in the following relation:

$$i_{nL}(t_o)=\mp\sqrt{I_{no}^2 + \left(\frac{1}{I_{no}^2}-a\right)v_{nC}^2(t_o)} - I_{no} \tag{22}$$

The two signs of the square root in eq. (22) indicate that there exist two operation modes for the converter. The positive and negative signs correspond to the natural and the forced commutation operations, respectively. Since the natural commutation mode has the property of zero-current switching at turn-off which can be used to reduce the switching loss, only the characteristic curves under this condition will be discussed. This can be done as follows. From the state-plane diagram given in Fig. 5, we can derive an expression of γ in terms of I_{no}, $i_{nL}(t_1)$, $i_{nL}(t_o)$, $v_{nC}(t_o)$ and $v_{nC}(t_1)$.

The conduction angle β can be expressed in the following form:

$$\beta = \pi - \sin^{-1}\left(\frac{i_{nL}(t_o)+I_{no}}{V_{nm1}}\right) - \sin^{-1}\left(\frac{i_{nL}(t_1)+I_{no}}{V_{nm1}}\right) \tag{23}$$

Also from the state-plane diagram we obtain the following relation for (γ-β):

$$\gamma-\beta = \sin^{-1}\left(\frac{i_{nL}(t_1)-I_{no}}{V_{nm2}}\right) + \sin^{-1}\frac{I_{no}}{V_{nm2}} \tag{24}$$

From eq. (16), (20), (22)-(24), γ can be expressed in the following form,

$$\gamma = \gamma[i_{nL}(t_o), v_{nc}(t_o), I_{no}, M, L_1/L_2] \tag{25}$$

The final relation that need to be expressed in terms of the initial switching point is Q_p which is given by,

$$Q_p = \frac{M}{I_{no}} \tag{26}$$

For given inductor ratio, L_1/L_2, and any two design parameters among Q_p, I_{no}, M, and γ, the converter can be completely designed. The control characteristic curve for gain and normalized switching frequency, f'_{ns} ($f'_{ns}=f_{ns}\sqrt{(1+L_2/L_1)}$) with L_1/L_2=1, 0.5 and 0.2, and under different load conditions, Q'_p ($Q'_p = Q_p\sqrt{(1+L_2/L_1)}$) are shown in Fig. 6 (a), (b) and (c), respectively. Note that for L_2/L_1 = 0, the converter simplifies to the second order inductive parallel resonant converter [11]. We should point out that for simplicity these figures were obtained under the assumption that the input voltage, $v_s(t)$, and the output current, $i_E(t)$, can be approximated as sinusoidal waveforms.

For comparison purposes between this topology and other topologies [1-7], the control characteristic curve for the LCC-type and LLC-type parallel resonant converters of Fig. 7(a) and (b), respectively, are shown in Fig. 8 (a) and (b), respectively [7,9].

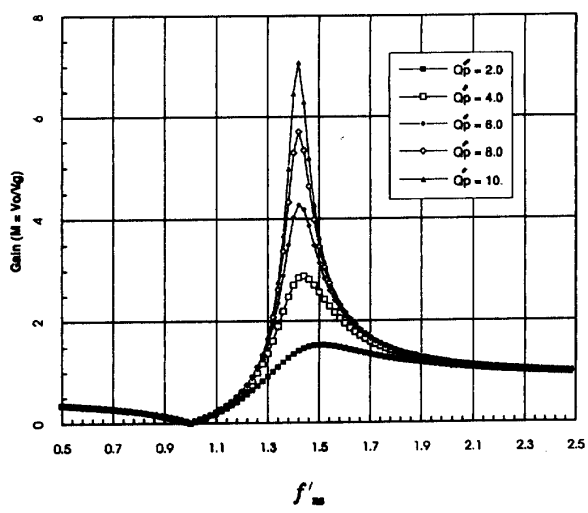

(A)

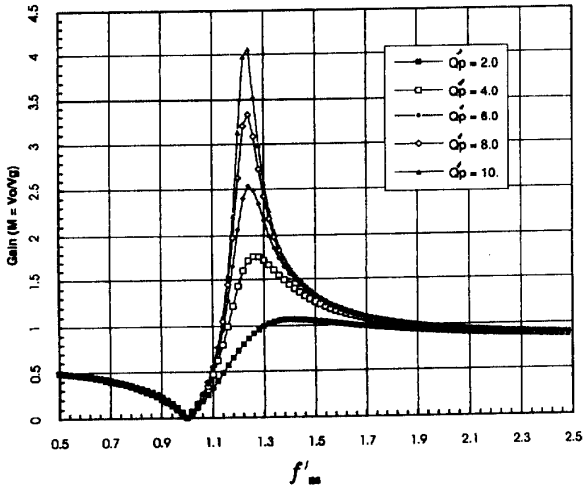

(B)

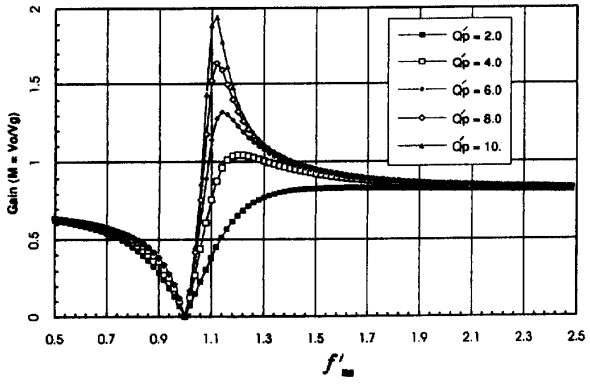

(C)

Fig. 6 Control Characteristic Curves for M vs. f_{ns} with constant Q_p for: a) L1/L2=1 b) L1/L2=0.5 c) L1/L2=0.2 .

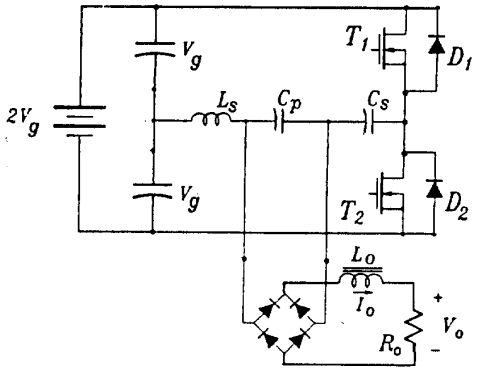

(A)

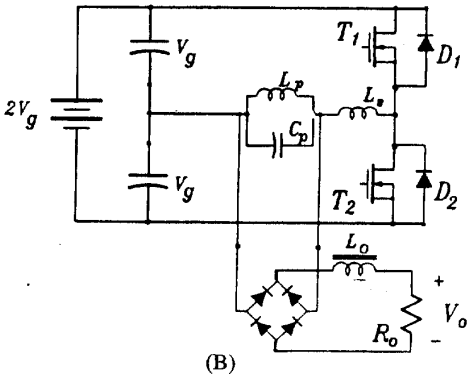

(B)

Fig. 7 Half-bridge circuit of the Parallel Resonant Converter topologies with: a) LCC-type and b) LLC-Type.

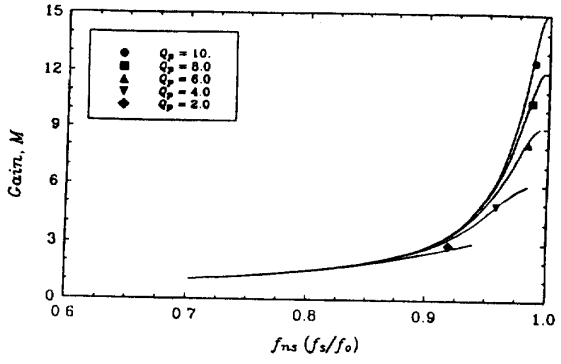

(A)

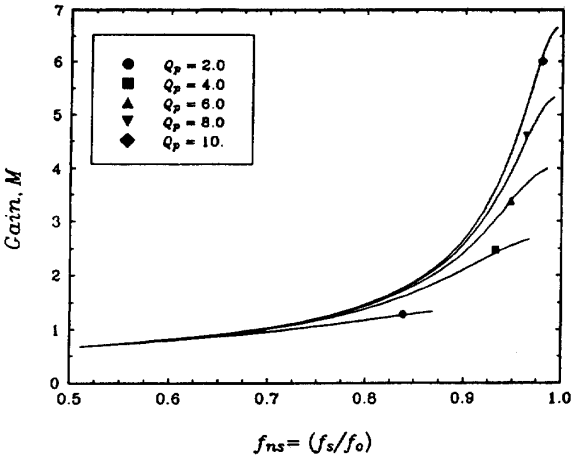

(B)

Fig. 8 Control Characteristic Curves for M vs. f_{ns} with constant Q_p for: a) Fig. 7(a) and b) Fig. 7(b) .

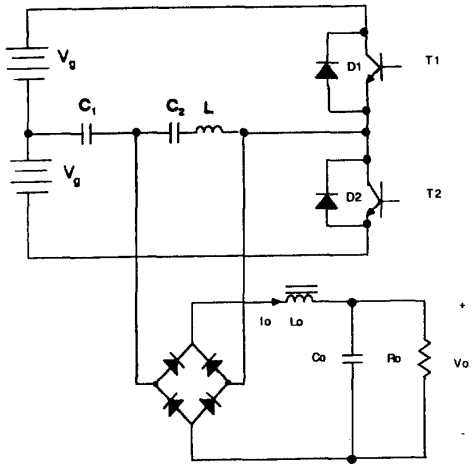

Fig. 9 Equivalent circuit for the capacitive-inductive PRC-LCC-Type converter.

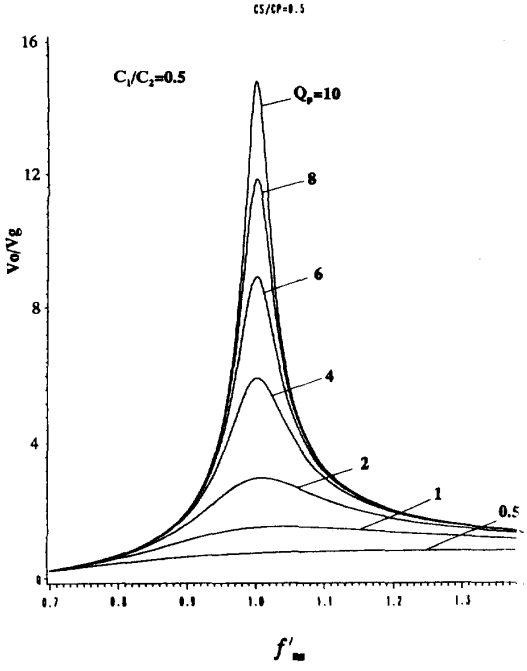

Fig. 10 Control Characteristic Curve for the LCC-Type PRC for Fig. 9.

Moreover, the control characteristics for the inductive-capacitive PRC of Fig. 9 is shown in Fig. 10. Comparing these conversion curves against Fig. 6, it can be shown that the outputs conversion for these four converter topologies have the same sensitive to the load variations. However, Fig. 6 has smaller output conversion ratio when compared to the others. Moreover, Fig. 6 shows that under some load conditions, the gain of the PRC-LLC of Fig. 1 could be less than one. Whereas, for Figs. 7 and 9, their gain is always greater than one. The advantages of the topology presented here is that it has a reduction in the gain by 70% and 65% than the topologies in Fig. 7 and 9, respectively. This is very important for application that need to avoid transformers. Hence, depending on the output levels required, unlike Figs. 7 and 9, the presented PRC-LLC topology might not need to use transformer.

V. COMPONENT STRESSES

In this section, we will derive expressions for the capacitor peak voltages C , the peak inductor currents i_{L1} and i_{L2}, and the average diode and transistor currents in terms of the state-plane parameters.

A) Normalized Average Diode Current, $I_{nD,\,ave}$.

It is clear from the state-plane diagram given in Fig. 5 that transistor T_1 seize conducting at $t=t_2$, at which diode D_1 starts conducting to carry the current in the opposite direction. Hence, the average diode current value can be calculated from this equation,

$$I_{D,ave} = \frac{1}{T_s/2}\int_{t_2}^{T_s/2+t_o}(i_{L2}(t)+i_E(t))dt \qquad (27)$$

Substituting for $i_L(t)$ and $i_E(t)$ in terms of the new state variables and using normalized quantities, we obtain the normalized diode current as follows:

$$I_{nD,ave} = \frac{1}{\gamma(1+L_1/L_2)}\left[\frac{\alpha^2}{1+L_2/L_1}+\alpha(L_1/L_2 i_{L1}(t_1)+i_{L2}(t_1)-I_{no}\alpha - L_1/L_2(v_{nC}(t_o) + v_{nC}(t_2))\right] \qquad (28)$$

where,

$$\alpha = \tan^{-1}\frac{i_{nL}(t_1)-I_{no}}{1+\frac{L_1}{L_2}} \qquad (29)$$

It is clear from the above equations that the normalized diode current was expressed in terms of the state-plane parameters.

$$v_{nC}(t_2) = V_{nm2} + \frac{1}{1 + \frac{L_2}{L_1}} \quad (30)$$

B) Normalized Average Transistor Current, $I_{nT,ave}$.

The normalized average diode current is given by the following equation,

$$I_{nT,ave} = I_{ng} - I_{nD,ave} \quad (31)$$

where I_{ng} is given in eq. (19).

C) Normalized Peak Capacitor Voltage.

The peak capacitor voltage across C occurs when its current is zero at $t=t_2$ as shown in Fig. 5. Hence, the normalized peak capacitor voltage across C is given by,

$$V_{nC,peak} = V_{nm2} + \frac{1}{1 + \frac{L_2}{L_1}} \quad (32)$$

where V_{nm2} is given in eq. (13).

D) Normalized Peak Inductor Current, $I_{nL2,peak}$.

The peak inductor current of L_2 occurs when $v_{nc}(t)= 1$. From the state-plane diagram, it is clear that the peak inductor current can be calculated from the following relation,

$$I_{nL2,peak} = i_{nL}(t_1) + i_{nL1}(t_1) \quad (33)$$

where,

$$i_{nL}(t_1) = \sqrt{V^2_{nm2} - \left(\frac{1}{1 + \frac{L_1}{L_2}}\right)^2 + I_{no}}$$

and

$$i_{nL1}(t_1) = \frac{M\gamma}{2(1 + \frac{L_2}{L_1})} - i_{nL}(t_1)$$

E) Normalized Peak inductor Current, $I_{nL1,peak}$.

The maximum inductor current in L_1 occurs at $t=t_o$, when $v_C=0$ as given by,

$$I_{nL1,peak} = i_{nL2}(t_o) - i_{nL}(t_o) \quad (34)$$

where,

$$i_{nL}(t_o) = \sqrt{V^2_{nm2} - \left(\frac{1}{1 + L_2/L_1}\right)^2} + I_{no}$$

Substituting for $i_{nL2}(t'_o)$ and $i_{nL}(t'_o)$ into eq. (34), we obtain the following relation,

$$I_{nL1,peak} = \frac{1}{(1 + L_1/L_2)}\left[\frac{\theta_1}{1 + L_2/L_1} + \frac{L_1}{L_2} i_{nL1}(t_o) + i_{nL2}(t_o) - i_{nL}(t_o)\right] \quad (35)$$

where,

$$\theta_1 = (t_1 - t_o)\omega_o$$
$$= -\tan^{-1}\frac{I_{no} + i_{nL}(t_o)}{\frac{1}{1 + L_2/L_1} - v_{nC}(t_o)} + \tan^{-1}\frac{i_{nL}(t_1) + I_{no}}{\frac{1}{1 + L_2/L_1}}$$

The initial values of $i_{nL1}(t_o)$ and $i_{nL2}(t_o)$ can be obtained from the following relations,

$$i_{nL2}(t_1) = \frac{1}{1+L_2/L_1}(\theta_1+\theta_2) - \frac{L_1}{L_2} i_{nL1}(t_1) + \frac{L_1}{L_2} i_{nL1}(t_o) + i_{nL2}(t_o)$$
$$i_{nL}(t_o) = i_{nL2}(t_o) - i_{nL2}(t_o) \quad (36)$$

where θ_1 and θ_2 are shown in Fig. 5. The above relations can be plotted against the normalized switching frequency. Due to time limitations, only the curves for the peak capacitor voltage and peak inductor currents are given. Figures 11(a),(b) and (c) show the maximum capacitor voltage, peak inductor L_1 and L_2, under different load conditions and for $L_1/L_2=1.0$, respectively.

VI. DESIGN EXAMPLE AND SIMULATION RESULTS

In this section, in order to verify the theoretical results, we present a specific design example supported by a Pspice simulation. Let us assume that the following specifications are given:

* Dc supply voltage	20V
* Output voltage	20V
* Switching frequency	220kHz
* Output current	1A

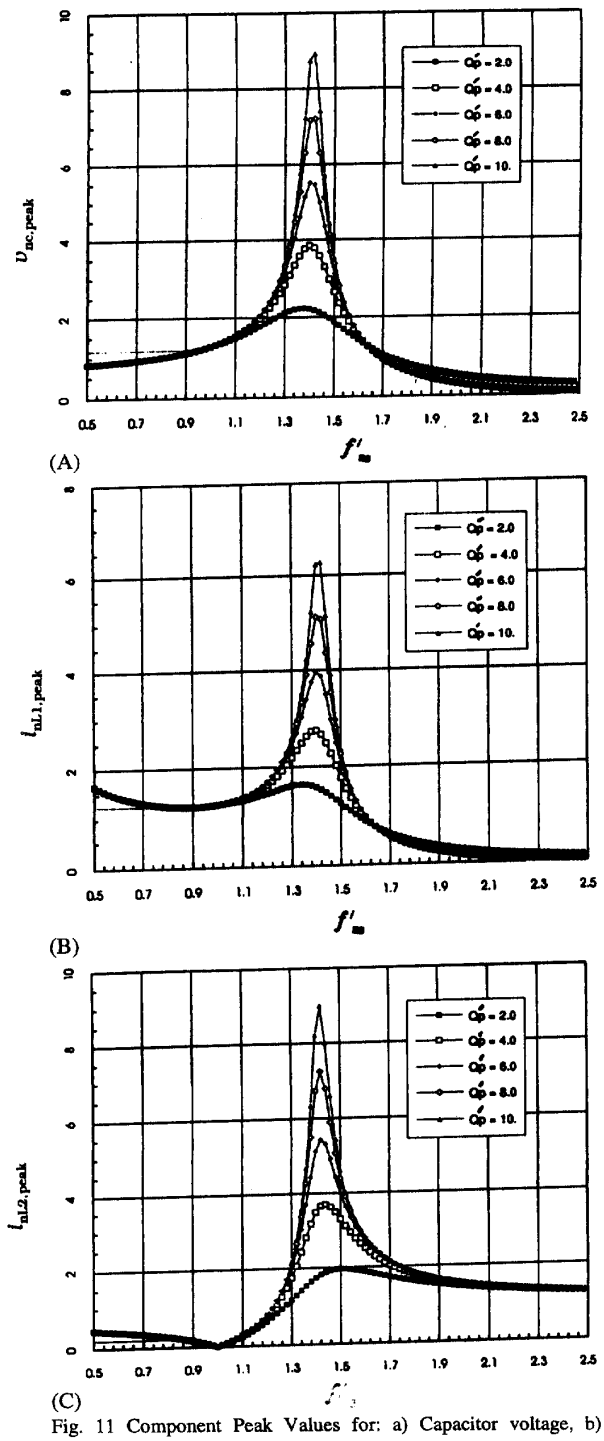

Fig. 11 Component Peak Values for: a) Capacitor voltage, b) Inductor Current, i_{L1} and c) Inductor Current, i_{L2} .

If it is assumed that no output transformer is used, then the voltage gain, M, is unity. By selecting Q_p=4 (Q'_p = 5.67≈6 in Fig. 6(a)), then the normalized switching frequency f'_{ns} ≈ 1.3 is obtained from Fig. 6(a), hence, f_{ns} is given by,

$$f_{ns} = 0.9$$

From the definition of the quality factor, Q_p, the characteristic impedance is obtained from the following relation,

$$Z_o = \frac{R_o}{Q_p} = \frac{V_o}{I_o Q_p} = 5\Omega$$

Similarly, from f_{ns}, the resonant frequency is given by,

$$f_o = \frac{f_s}{f_{ns}} = 244.44\ kHz$$

Hence, from Z_o and f_o, we obtain the resonant components as follows,

$$L_T = \frac{Z_o}{\omega_o} = 3.2554\ \mu H$$

$$C = \frac{1}{Z_o \omega_o} = 0.13\ \mu F$$

Hence, L_1=6.51 μH and L_2=6.51 μH. Figure 12 shows the simulated circuit and the corresponding values. The simulation results are shown in Fig. 13, where the simulated steady state waveforms for i_{L1}, i_{L2}, v_C, v_{L2}, V_o, and I_o are illustrated.

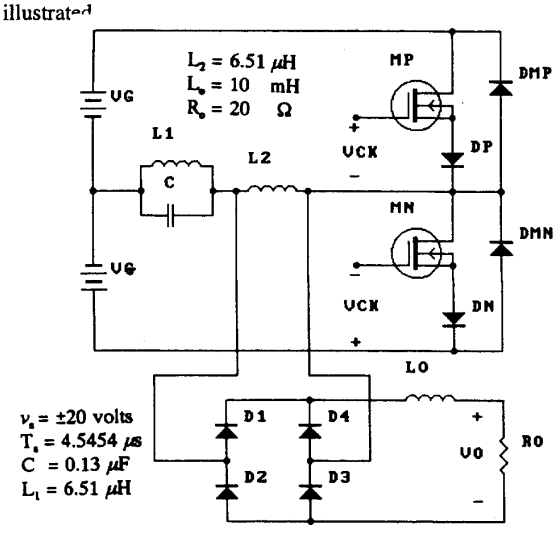

Fig. 12 PSPICE Simulated Circuit for Fig. 1.

Furthermore, if it is assumed that the load changes from full-load (I_o=1A) to low-load (I_o=0.1A), then it can be shown that the new switching frequency is 210.2 kHz. Similarly, under line regulation, if it is assumed that the input voltage changes from 20V to 15V, then the new switching frequencies at full- and low-load conditions are 224.88 kHz and 215.1 kHz, respectively. The simulated results along with theoretical results under line and load variations are shown in Table II. It is clear that both theoretical and simulated results are in a good agreement.

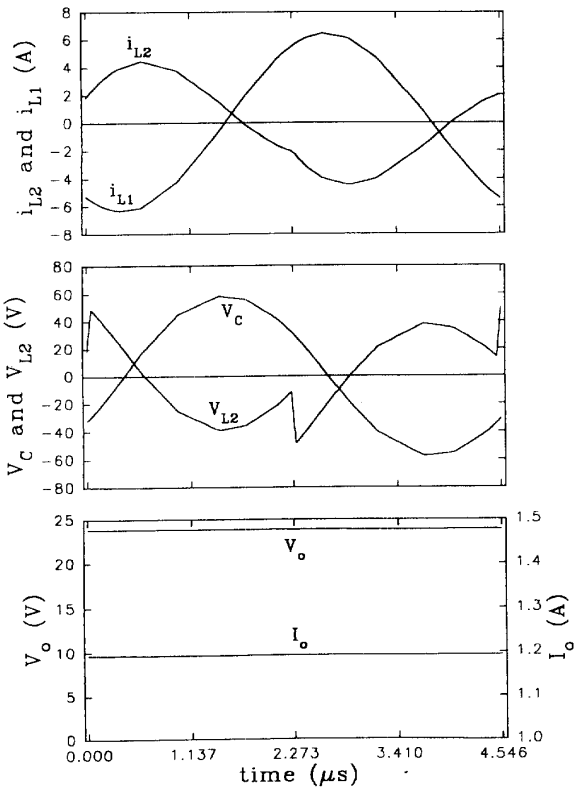

Fig. 13 Simulated Waveforms: i_{L1}, i_{L2} , v_C , v_{L2} , V_o, and I_o .

It is concluded from the above table that when the load changes by 90% and the input voltage varies by 25%, only a 14.68 kHz variation (from 224.88 kHz to 210.2 kHz) in the switching frequency is needed to keep the output constant.

REFERENCES

[1] R. Severns, "Topologies for three Element Resonant Converters," IEEE-Tran. on Power Electronics, Vol. PE-7, No. 1, pp. 89-97, January 1992.

[2] R. Steigerwald, "A Comparison of Half-Bridge Resonant Converter Topologies," IEEE PESC Conference, pp. 135-144, 1987.

[3] A.K.S. Bhat, "A Unified Approach for the Steady-State Analysis of Resonant Converters," IEEE-Trans. on Industrial Electronics, Vol. IE-38, No. 4, pp. 251-259, August 1991.

[4] G.S. Raju and S.R. Doradla, "A Novel LCL-Resonant Converter with PWM Control- Analysis, Simulation and Implementation," IEEE-APEC'94, pp. 998-1004, Feb. 1994.

[5] S. Farhangi, U. Kirchenberger, and D. Schroeder, "Energy based Closed form Solution of ZCS Multiresonant Series-Parallel Converters for Optimum Design," IEEE-PESC'93, pp. 714-720, June 1993.

[6] I. Batarseh, "Resonant Converters with Three and Four Energy Storage Elements," IEEE Trans. on Power Electronics, Vol. 8, No. 1, Janury 1994 (to appear).

[7] I. Batarseh, R. Liu, C.Q. Lee and A. Upadhyay, "Theoretical and Experimental Studies of the LCC-Type Parallel Resonant Converter," IEEE Trans. on Power Electronics, Vol. 5, No. 2, pp. 140-150, April 1990.

[8] A.K.S. Bahat and S.B. Dewan, " Analysis and Design of a High Frequency Resonant Converter Using LCC-Type Commutation, Conf. Rec. of Ind. App. Soc. Ann. Mtg. IEEE, pp. 657-663, 1986.

[9] R. Liu, I Batarseh and C. Q. Lee, "The LLC-type and the Class-E Resonant Converters," In the Conf. Rec. of High Frequency Power Conversion '89, Naples, FL, pp. 1486-1496, May 1989.

[10] I. Batarseh and J. Nayfeh, "Analysis of a New Parallel Resonant Converter Topology," International Poweer Conversion Conference-PCIM'92, pp. 17-25, September 1992.

[11] R. Liu, I. Batarseh, C.Q. Lee, "Comparison of Capacitively and Inductively Coupled Parallel Resonant Converters," IEEE Trans. on Power Electronics, Vol. 8, No. 4, pp. 445-454, October 1993.

Table II Theoretical and Simulated Results under Load and Line Variations

Line & Load Conditions / Parameters	*Maximum input voltage and Full-load*		*Maximum input voltage and Low-load*		*Minimum input voltage and Full-load*		*Minimum input voltage and Low-load*	
	Theory	*Simulation*	*Theory*	*Simulation*	*Theory*	*Simulation*	*Theory*	*Simulation*
I_o (A)	1.0	1.193	0.1	0.114	1.0	1.024	0.1	0.14
V_o (V)	20	23.86	20	22.8	20	20.48	20	22.8
I_{L1peak}	6.35	6.31	6.64	6.80	4.99	4.79	5.75	6.10
I_{L2peak}	4.24	4.44	3.96	3.91	4.50	3.62	4.20	3.80
V_{cpeak}	57.00	57.64	58.00	57.90	44.00	44.8	53.50	54.85